# Lakeshore Drive
# Bluff Stabilization
## Saugatuck Township, Allegan County, Michigan

## UTILITY COMPANIES

TELEPHONE/CABLE
FRONTIER/VERIZON
PH: 800.921.8101

SEWER/WATER
KALAMAZOO LAKE SEWER & WATER AUTHORITY
P.O. BOX 789,
SAUGATUCK, MI 49453
PH: 269.857.2709

ELECTRICAL
CONSUMERS ENERGY ELECTRIC DISTRIBUTION
BEN DUDLEY
PH: 248.147.8857
EMAIL: BEN.DUDLEY@CMSENERGY.COM

GAS
MICHIGAN GAS UTILITIES
PH: 800.401.6451

**WARNING!!**
THE LOCATIONS AND ELEVATIONS OF EXISTING UNDERGROUND UTILITIES AS SHOWN ON THIS DRAWING ARE ONLY APPROXIMATE. NO GUARANTEE IS EITHER EXPRESSED OR IMPLIED AS TO THE COMPLETENESS OR ACCURACY THEREOF. THE CONTRACTOR SHALL BE EXCLUSIVELY RESPONSIBLE FOR DETERMINING THE EXACT UTILITY LOCATIONS AND ELEVATIONS PRIOR TO THE START OF CONSTRUCTION.

811 Know what's below. Call before you dig.

## OWNER

ALLEGAN COUNTY ROAD COMMISSION
1308 LINCOLN ROAD
ALLEGAN, MICHIGAN 49010

CONTACT: MR. CRAIG ATWOOD, PE
PH: 269.673.2184

## SURVEYOR

ALLEGAN COUNTY ROAD COMMISSION
1308 LINCOLN ROAD
ALLEGAN, MICHIGAN 49010

CONTACT: MR. LUKE HANSEN
PH: 269.673.2184

## ENGINEER

SME
3301 TECH CIRCLE DR
KALAMAZOO, MI 49008

CONTACT: MR. JEFFERY M. KRUSINGA, PE, GE
PH: 269.323.3555
www.sme-usa.com

SME PROJECT NO. 085204.00

## LIST OF DRAWINGS



## WORK TO BE DONE

THE CONTRACTOR SHALL FURNISH ALL TOOLS, LABOR, AND MATERIALS NECESSARY TO PERFORM THE WORK IN ACCORDANCE WITH THESE PLANS AND SPECIFICATIONS. THE PROJECT GENERALLY CONSISTS OF ALL WORK NECESSARY TO INSTALL A TIED-BACK STEEL SHEET PILE WALL ALONG LAKESHORE DRIVE. THE WORK TO BE DONE INCLUDES THE FOLLOWING:

1. INSTALL TEMPORARY TRAFFIC CONTROL MEASURES.
2. INSTALL TEMPORARY SOIL EROSION AND SEDIMENTATION CONTROL MEASURES.
3. REMOVE ASPHALT PAVEMENT WITHIN THE LIMITS SPECIFIED.
4. INSTALL THE SHEET PILE WALL SYSTEM, INCLUDING THE FRONT WALL OF SHEETS, DEADMAN SHEETS, FRONT WALER, DEADMAN WALERS, AND ANCHOR RODS. LOCK OFF ANCHOR RODS TO THE FRONT WALER.
5. CONSTRUCT A CONCRETE COLLAR AROUND HDPE STORM PIPE WHERE PIPE PENETRATES BELOW FRONT LINE OF SHEET PILES.
6. INSTALL TYPE B GUARDRAIL WITH ENDINGS.
7. GRADE THE ROADWAY SUBGRADE TO PROVIDE A SMOOTH TRAVEL WAY.
8. MAINTAIN SOIL EROSION AND SEDIMENTATION CONTROL MEASURES UNTIL THE SITE IS ACCEPTED FOR MAINTENANCE BY THE OWNER.

INCLUDED IN THE WORK IS FIELD VERIFYING THE LOCATIONS AND ELEVATIONS OF EXISTING UTILITIES THAT MAY INTERFERE WITH THE WORK. UPON COMPLETION OF THE WORK, THE ENTIRE WORK AREA SHALL BE CLEARED OF EQUIPMENT, UNUSED MATERIALS, AND RUBBISH SO AS TO PRESENT A CLEAN AND NEAT APPEARANCE TO THE SATISFACTION OF THE OWNER.

## SPECIFICATIONS

THE WORK COVERED BY THESE PLANS SHALL BE PERFORMED IN ACCORDANCE WITH THE 2012 MICHIGAN DEPARTMENT OF TRANSPORTATION STANDARD SPECIFICATIONS FOR CONSTRUCTION, EXCEPT AS OTHERWISE NOTED HEREIN AND EXCEPT AS QUALIFIED IN SUPPLEMENTAL SPECIFICATIONS AND SPECIAL CONDITIONS OF THE ALLEGAN COUNTY ROAD COMMISSION OR AS AGREED TO IN WRITING AT THE TIME OF THE AWARD OF THE CONTRACT.

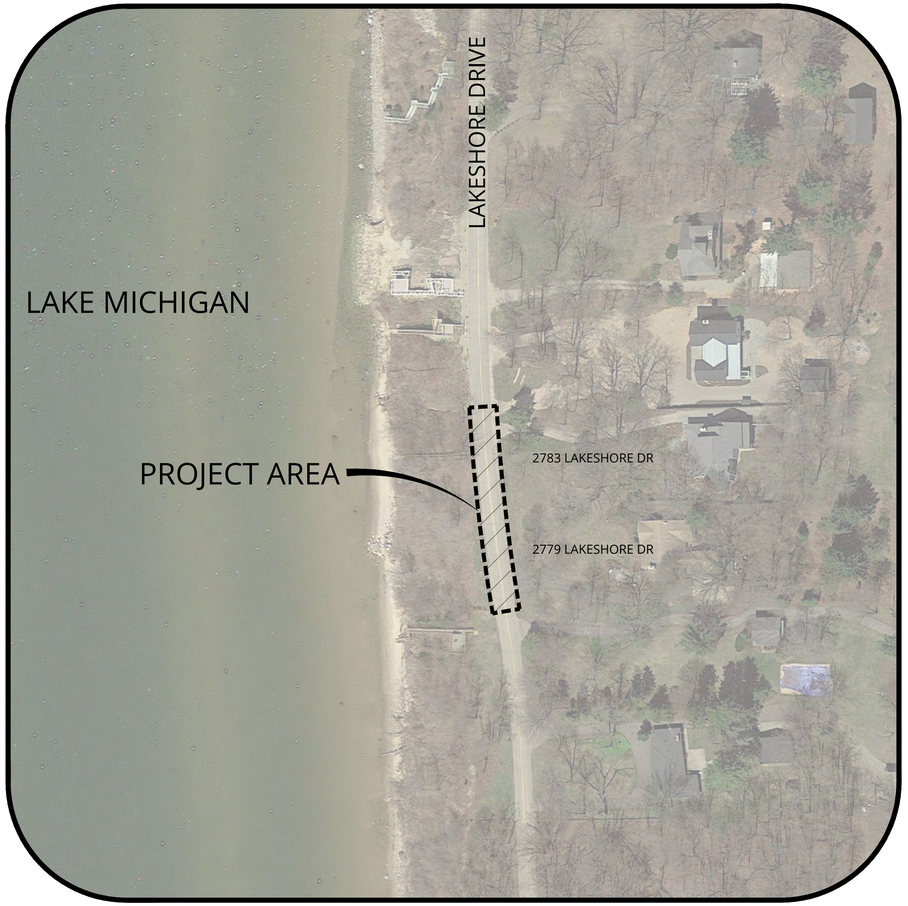


**LOCATION MAP**
NOT TO SCALE

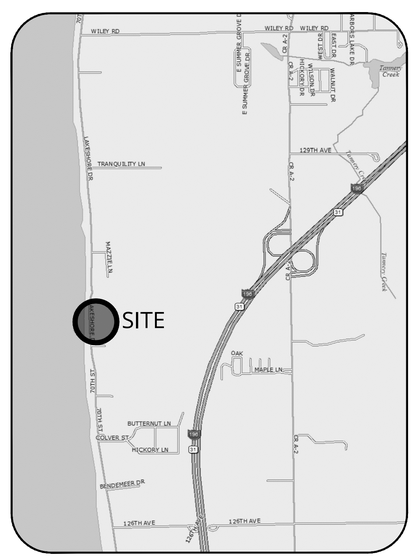


**VICINITY MAP**
NOT TO SCALE


**COUNTY MAP**
NOT TO SCALE

**ISSUED FOR BID**

CONSTRUCTION SITE SAFETY IS THE RESPONSIBILITY OF THE CONTRACTOR. NEITHER THE OWNER NOR THE ENGINEER SHALL BE EXPECTED TO ASSUME RESPONSIBILITY FOR SAFETY OF THE WORK, OF PERSONS ENGAGED IN THE WORK, OF NEARBY STRUCTURES, NOR OF OTHER PERSONS.

SME
www.sme-usa.com

Orientation | Scale

ALLEGAN COUNTY ROAD COMMISSION 1835

Project
**LAKESHORE DRIVE BLUFF STABILIZATION**
**SAUGATUCK TOWNSHIP, ALLEGAN COUNTY, MICHIGAN**

Sheet Name
**COVER SHEET**

Engineer's Seal

Revisions

| REV | ISSUED FOR | DATE | BY |
|---|---|---|---|
| 01 | OWNER REVIEW | 02-01-2021 | HJC |
| 02 | BIDS | 02-12-2021 | HJC |

Date: 02-01-21
SME Project No.: 085204.00
Project Manager: J. KRUSINGA
Designer: T. BEDENIS/H. CERON
CADD: H. CERON/G. KURDI
Checked By: J. KRUSINGA
Reviewed By: J. KRUSINGA
Sheet No.: C-100



PLOT DATE: Feb 11, 2021 - 10:06pm - hugo.ceron FILE LOCATION: \\Sme-inc\pw\WIP\085204.00\CAD\DWGS\Eng\rev2\085204.00-Cover.dwg

## GENERAL NOTES

1. MATERIAL AND CONSTRUCTION METHODS SHALL FOLLOW THE PRACTICE DEFINED BY THE LATEST EDITION OF THE MICHIGAN DEPARTMENT OF TRANSPORTATION "STANDARD SPECIFICATIONS FOR CONSTRUCTION" AND APPLICABLE SPECIAL PROVISIONS UNLESS OTHERWISE MODIFIED HEREWITHIN OR IN THE PROJECT SPECIFICATIONS.
2. THE LOCATION OF ALL UTILITIES SHOWN ON THESE PLANS IS TAKEN FROM AVAILABLE DATA. OWNER WILL NOT BE RESPONSIBLE FOR ANY OMISSION OR VARIATIONS FROM THE LOCATIONS SHOWN. PURSUANT TO ACT 174 OF THE PA OF 2013, AND AS A CONDITION OF THIS CONTRACT, NOTICE SHALL BE GIVEN TO MISS DIG PRIOR TO UNDERGROUND WORK TO BE PERFORMED IN ACCORDANCE WITH THIS CONTRACT. CALL 811.
3. FOR PRIVATE UTILITIES, CONTRACTOR SHALL RETAIN THE SERVICES OF A PRIVATE UTILITY LOCATOR TO LOCATE ALL PRIVATE UTILITIES.
4. CONTRACTOR SHALL NOTIFY OWNER'S REPRESENTATIVE A MINIMUM OF 72 HOURS PRIOR TO BEGINNING CONSTRUCTION ACTIVITIES OR DISRUPTION OF ANY UTILITY.
5. THE CONTRACTOR SHALL LOCATE ALL ACTIVE UNDERGROUND UTILITIES PRIOR TO STARTING WORK AND SHALL CONDUCT HIS OPERATIONS IN SUCH A MANNER AS TO ENSURE THAT THOSE UTILITIES NOT REQUIRING RELOCATION WILL NOT BE DISTURBED. CONTRACTOR SHALL BE RESPONSIBLE TO REPAIR UTILITIES DAMAGED DURING CONSTRUCTION.
6. THE CONTRACTOR SHALL CONDUCT HIS OPERATIONS IN SUCH A MANNER TO COMPLY WITH ALL FEDERAL, STATE, AND LOCAL CODES FOR NOISE LEVELS, VIBRATIONS, OR ANY OTHER RESTRICTIONS WHILE REMOVING PAVEMENT OR FOR ANY OTHER CONSTRUCTION OPERATIONS WITHIN THIS CONTRACT TO BE INCLUDED IN THE RESPECTIVE ITEM OF WORK.
7. CONTRACTOR AGREES TO ASSUME SOLE AND COMPLETE RESPONSIBILITY FOR JOB SITE CONDITIONS DURING THE COURSE OF CONSTRUCTION OF THIS PROJECT, INCLUDING SAFETY OF ALL PERSONS AND PROTECTION OF PROPERTY.
8. THE CONTRACTOR SHALL DESIGN, CONSTRUCT, AND MAINTAIN ALL SAFETY DEVICES, AND SHALL BE SOLELY RESPONSIBLE FOR CONFORMING TO ALL LOCAL, STATE, AND FEDERAL SAFETY AND HEALTH STANDARDS, LAWS, AND REGULATIONS. ALL TRAFFIC CONTROL ACTIVITIES SHALL BE PERFORMED IN ACCORDANCE WITH THE LATEST VERSION OF THE MICHIGAN MANUAL OF UNIFORM TRAFFIC CONTROL DEVICES.
9. CONTRACTOR IS RESPONSIBLE FOR OBTAINING ANY NECESSARY PERMITS AND CONFORMING TO ALL APPLICABLE PERMIT REQUIREMENTS.
10. CONTRACTOR SHALL SUBMIT ALL MATERIAL SUBMITTALS REQUIRED BY THE PROJECT SPECIFICATIONS TO ENGINEER A MINIMUM OF 14 DAYS PRIOR TO BEGINNING FIELD WORK.
11. UPON COMPLETION OF EACH DAY OF WORK, THE CONTRACTOR SHALL BE RESPONSIBLE FOR LEAVING THE WORK AREA FREE OF HAZARDS AND SHALL PROVIDE ALL NECESSARY TEMPORARY SIGNS, WARNING DEVICES, AND BARRICADES.
12. THE CONTRACTOR SHALL HAVE AN APPROVED SET OF FINAL PLANS MARKED ``ISSUED FOR CONSTRUCTION" ON THE JOB SITE AT ALL TIMES.THE CONTRACTOR SHALL KEEP ACCURATE AND LEGIBLE RECORDS OF ALL CHANGES OF WORK THAT OCCUR DURING CONSTRUCTION AND INFORMATION ON ``AS-BUILT" CONDITIONS. DOCUMENTATION OF CHANGES AND AS-BUILT INFORMATION SHALL BE RECORDED ON AN APPROVED SET OF FINAL PROJECT PLANS AND DELIVERED TO THE ENGINEER AFTER COMPLETION OF WORK.
13. THE CONTRACTOR SHALL TAKE THE NECESSARY STEPS TO PROTECT THE PROJECT AND ADJACENT PROPERTY FROM ANY EROSION AND SILTING THAT RESULT FROM THE CONSTRUCTION BY APPROPRIATE MEANS UNTIL SUCH TIME THE PROJECT IS COMPLETED AND ACCEPTED FOR MAINTENANCE BY OWNER.

## STEEL NOTES

1. ALL STRUCTURAL STEEL INCLUDING SHEET PILES AND WALERS SHALL CONSIST OF STEEL CONFORMING TO ASTM A572 (GRADE 50).
2. ALL MISCELLANEOUS PLATES, ANGLES, AND OTHER STRUCTURAL SHAPES SHALL CONFORM TO ASTM A36.
3. ANCHOR RODS SHALL CONSIST OF THREADED BAR CONFORMING TO ASTM A615 (GRADE 75)
4. WELDING ELECTRODES SHALL CONFORM TO THE REQUIREMENTS OF AWS A5.1, CLASS E70 OR APPROVED EQUAL. ALL WELDING SHALL CONFORM TO AWS D1.1 CODE FOR WELDING IN BUILDING CONSTRUCTION.

## MAILBOX NOTES

1. CONTRACTOR SHALL TEMPORARILY RELOCATE PRIVATE MAILBOXES WITHIN THE WORK AREA SO THAT MAIL DELIVERY IS MAINTAINED DURING CONSTRUCTION.
2. CONTRACTOR SHALL RE-INSTALL AFFECTED MAILBOXES TO A SUITABLE PERMANENT LOCATION FOR MAIL DELIVERY AS PART OF SITE RESTORATION.

## TRAFFIC CONTROL NOTES

1. CONTRACTOR SHALL ESTABLISH TRAFFIC CONTROL MEASURES AT THE ONSET OF CONSTRUCTION AND MAINTAIN SUCH MEASURES UNTIL COMPLETION.
2. TRAFFIC CONTROL SHALL CONSIST OF A TEMPORARY ROAD CLOSURE. CONTRACTOR MUST MAINTAIN A SINGLE LANE ONLY FOR LOCAL TRAFFIC. CONTRACTOR MUST SHIFT THE SINGLE LANE FOR LOCAL TRAFFIC AS NECESSARY TO ACCOMMODATE THE WORK.

## EARTHWORK AND EXCAVATION NOTES

1. ALL BACKFILL PLACED IN STRUCTURAL AREAS MUST BE COMPACTED TO A MINIMUM OF 95 PERCENT OF THE MAXIMUM DRY DENSITY DETERMINED IN ACCORDANCE WITH THE MODIFIED PROCTOR TEST.
2. IN GREENBELT OR NON-STRUCTURAL AREAS, BACKFILL MUST BE COMPACTED TO A MINIMUM OF 90 PERCENT OF THE MAXIMUM DRY DENSITY DETERMINED IN ACCORDANCE WITH THE MODIFIED PROCTOR TEST.
3. ON-SITE SANDS ENCOUNTERED IN EXCAVATIONS MAY BE RE-USED AS BACKFILL, PROVIDED THE MATERIAL IS FREE FROM FROZEN SOIL, DEBRIS, OR EXCESSIVE ORGANICS. CLAYS (IF ANY) ENCOUNTERED IN EXCAVATIONS MUST NOT BE RE-USED AS BACKFILL AND MUST BE DISPOSED OFF SITE.
4. ALL BACKFILL SHOULD BE PLACED IN RELATIVELY THIN LIFTS, WITH EACH LIFT SUITABLY COMPACTED BEFORE PLACING ADDITIONAL LIFTS. SAND FILL SHOULD BE COMPACTED WITH APPROPRIATE VIBRATORY COMPACTION EQUIPMENT. LIFT THICKNESSES MUST BE LIMITED SUCH THAT THE COMPACTION EQUIPMENT BEING USED CAN SUITABLY COMPACT THE ENTIRE LIFT THICKNESS.

## DEMOLITION/REMOVAL NOTES

1. SAWCUT FULL DEPTH THE PAVEMENT DESIGNATED TO BE REMOVED AT THE LIMITS OF WORK SHOWN ON THE PLANS OR MARKED IN THE FIELD.
2. REMOVE ONLY THE STRUCTURES AND PAVEMENTS WITHIN THE LIMITS OF WORK AS DETAILED ON THE PLANS AND CROSS SECTIONS. ALL OTHER STRUCTURES AND PAVEMENT SHALL BE PROTECTED AS REQUIRED.
3. ALL EXISTING UNDERGROUND UTILITIES WITHIN THE AREA OF WORK SHALL REMAIN AND BE PROTECTED DURING CONSTRUCTION, UNLESS OTHERWISE DESIGNATED TO BE REMOVED. CONTRACTOR SHALL VERIFY EXACT LOCATION AND DEPTHS OF ALL EXISTING UTILITIES PRIOR TO COMMENCEMENT OF DEMOLITION OPERATIONS.
4. CONTRACTOR SHALL DISPOSE OF ALL ASPHALT AT A LEGAL DISPOSAL SITE. CONTRACTOR SHALL PAY FOR ALL TRUCKING AND DISPOSAL COSTS.
5. MATERIAL AND SITE FEATURES HAVING SALVAGE VALUE SHALL BECOME THE PROPERTY OF THE OWNER UNLESS SPECIFIED OTHERWISE. ALL OTHER MATERIAL AND DEBRIS ACCUMULATED AS A RESULT OF DEMOLITION/REMOVAL/REPAIR ACTIVITIES SHALL BECOME THE PROPERTY OF THE CONTRACTOR AND DISPOSED OF IN A LEGAL MANNER.

## CLEANUP AND RESTORATION NOTES

1. PROTECT ADJACENT AREAS OUTSIDE OF PROJECT LIMITS DURING CONSTRUCTION. RESTORE ALL DISTURBED AREAS TO MATCH EXISTING CONDITIONS UNLESS OTHERWISE NOTED ON THE PROJECT PLANS. RESTORE GREENBELT AREAS WITH MINIMUM 4" OF TOPSOIL, APPLY SEED AND THEN COVER SEEDED AREAS WITH STRAW BLANKETS FASTENED WITH WOOD PEGS IN ACCORDANCE WITH MANUFACTURER RECOMMENDATIONS.
2. UPON COMPLETION OF WORK, THE ENTIRE SITE SHALL BE CLEARED OF EQUIPMENT, UNUSED MATERIALS, AND RUBBISH AND ANY DISTURBED AREAS RESTORED TO THE SATISFACTION OF THE OWNER.

## CONSTRUCTION STAKING

1. ACRC WILL PROVIDE CONSTRUCTION STAKING FOR THE PROJECT.

## WORK AREA LIMITS NOTES

1. CONTRACTOR MUST CONFINE THEIR OPERATIONS TO THE RIGHT-OF-WAY ALONG LAKESHORE DRIVE. CONTRACTOR OPERATIONS MAY ALSO OCCUPY THE 60-FOOT-WIDE EASEMENT APPROXIMATELY CENTERED ON THE EXISTING 24-INCH-DIAMETER HDPE STORM DRAIN THAT EXTENDS DOWN TO LAKE MICHIGAN.
2. ACRC WILL STAKE THE RIGHT-OF-WAY LIMITS AND THE EASEMENT AT THE ON SET OF CONSTRUCTION.

## ABBREVIATIONS USED IN DRAWINGS

THE FOLLOWING ABBREVIATIONS ARE USED ON THESE PLANS:

| | |
|---|---|
| ACRC | ALLEGAN COUNTY ROAD COMMISSION |
| BM | BENCHMARK |
| B.O.W. | BOTTOM OF WALL |
| CB | CATCH BASIN |
| CL | CENTERLINE |
| DIA. | DIAMETER |
| EG | EXISTING GRADE |
| EL | ELEVATION |
| EW | EDGE OF WATER |
| EX. | EXISTING |
| FT. | FEET OR FOOT |
| FT-LBS | FOOT-POUNDS |
| FND | FOUND |
| GF | GAS FLAG |
| HDPE | HIGH DENSITY POLYETHYLENE |
| ID | INSIDE DIAMETER |
| KSI | KIPS PER SQUARE-INCH |
| MAX. | MAXIMUM |
| MB | MAILBOX |
| MDOT | MICHIGAN DEPARTMENT OF TRANSPORTATION |
| MIN. | MINIMUM |
| NO. | NUMBER |
| OD | OUTSIDE DIAMETER |
| PH | PHONE |
| ROW | RIGHT-OF-WAY |
| STA. | STATION |
| T&B | TOP AND BOTTOM |
| T.O.W. | TOP OF WALL |
| TYP. | TYPICAL |

## DEFINITIONS USED IN DRAWINGS

THE FOLLOWING DEFINITIONS ARE USED ON THESE PLANS:

| | |
|---|---|
| ENGINEER | SME |
| OWNER | ALLEGAN COUNTY ROAD COMMISSION |

ISSUED FOR BID

SME
www.sme-usa.com

Orientation

Scale

ALLEGAN COUNTY ROAD COMMISSION I-35 I-35

Project

**LAKESHORE DRIVE BLUFF STABILIZATION**

**SAUGATUCK TOWNSHIP, ALLEGAN COUNTY, MICHIGAN**

Sheet Name

**GENERAL PROJECT NOTES**

Engineer's Seal

Revisions

| REV | ISSUED FOR | DATE | BY |
|---|---|---|---|
| 01 | OWNER REVIEW | 02-01-2021 | HJC |
| 02 | BIDS | 02-12-2021 | HJC |

Date: 02-01-21

SME Project No.: 085204.00

Project Manager: J. KRUSINGA

Designer: T. BEDENIS/H. CERON

CADD: H. CERON/G. KURDI

Checked By: J. KRUSINGA

Reviewed By: J. KRUSINGA

Sheet No.: C-101



PLOT DATE: Feb 12, 2021 - 10:47am - hugo.ceron FILE LOCATION: \\Sme-inc\pro\WIP\085204.00\CAD\DWGS\Eng\rev3\085204.00-Notes.dwg

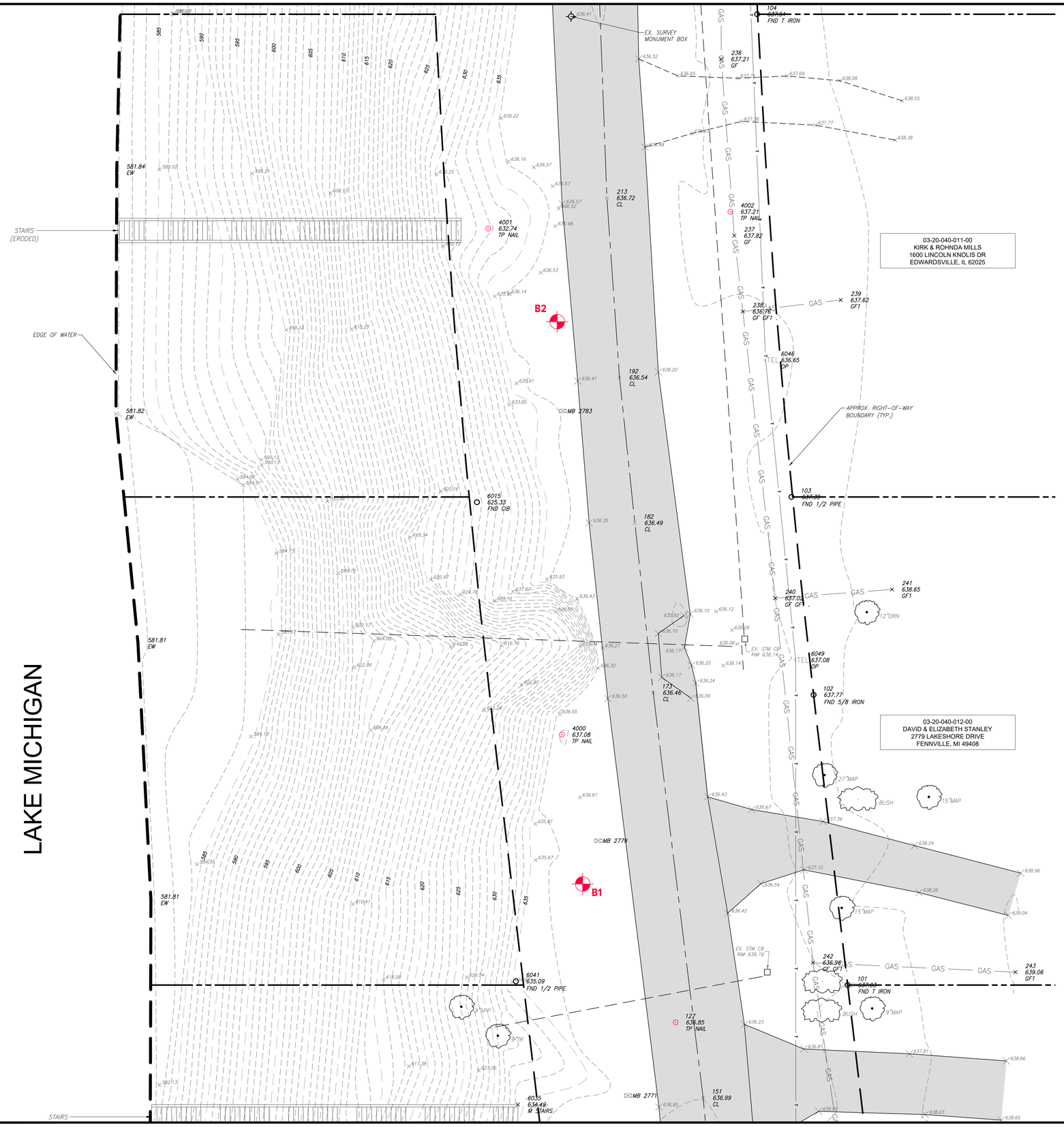


## EXISTING LEGEND

RIGHT OF WAY
PROPERTY LINE
CONTOUR
INDEX CONTOUR
STORM SEWER
TELEPHONE
GAS
BENCHMARK
SURVEY MONUMENT BOX
SQUARE CATCH BASIN
ROUND CATCH BASIN
BEEHIVE CATCH BASIN
STORM MANHOLE
SIGN
ELECTRICAL BOX
ELECTRICAL MANHOLE
MAILBOX
EX. GRADE
TREE
BORING
ASPHALT PAVEMENT

## BENCHMARK DATA

BM #1 PK NAIL SET IN ASPHALT ROADWAY
EL. 637.84 FT.

BM #2 PK NAIL SET IN ASPHALT ROADWAY
EL. = 639.47 FT.

## SURVEY AND UTILITY NOTES

1. TOPOGRAPHIC SURVEY USED AS A BASE FOR THIS DRAWING PREPARED BY THE ALLEGAN COUNTY ROAD COMMISSION. FIELD WORK FOR THE SURVEY COMPLETED IN NOVEMBER 2020.
2. ALL ELEVATIONS BASED ON NAVD88 VERTICAL DATUM. SEE BENCHMARK DESCRIPTIONS ON THIS PLAN SHEET.
3. SURVEY BASED ON MICHIGAN STATE PLANE COORDINATE SYSTEM, ZONE MICHIGAN SOUTH 2113, INTERNATIONAL FEET.
4. THE SURVEY DOES NOT SHOW ALL EASEMENTS OF RECORD.
5. A BOUNDARY SURVEY WAS NOT PERFORMED.
6. THE LOCATION OF EXISTING UTILITIES AS SHOWN ON THIS PLAN WERE OBTAINED FROM MUNICIPAL RECORDS, MISS DIG MARKINGS, AND/OR SURVEY OF VISIBLE PORTIONS OF UTILITIES. NO GUARANTEE IS MADE REGARDING THE COMPLETENESS OR ACCURACY OF THE UTILITIES SHOWN. IT IS THE CONTRACTOR'S RESPONSIBILITY TO VERIFY THE FIELD LOCATIONS OF ALL UTILITIES.
7. SEE SHEET NO. D-101 FOR LOGS OF THE BORINGS SHOWN ON THIS PLAN SHEET.

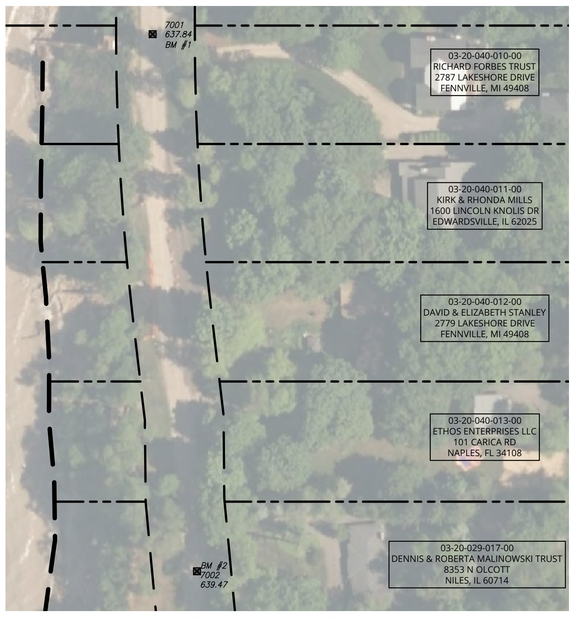


## BENCHMARK LOCATIONS

SCALE: 1" = 60'

**ISSUED FOR BID**

SME
www.sme-usa.com

Orientation

Scale
0' 10' 20'
GRAPHIC SCALE: 1" = 10'

ALLEGAN COUNTY ROAD COMMISSION 1835 1835

**Project**

**LAKESHORE DRIVE BLUFF STABILIZATION**

**SAUGATUCK TOWNSHIP, ALLEGAN COUNTY, MICHIGAN**

**Sheet Name**

**EXISTING SITE CONDITIONS**

**Engineer's Seal**

**Revisions**

| REV | ISSUED FOR | DATE | BY |
|---|---|---|---|
| 01 | OWNER REVIEW | 02-01-2021 | HJC |
| 02 | BIDS | 02-12-2021 | HJC |

**Date** 02-01-21

**SME Project No.** 085204.00

**Project Manager:** J. KRUSINGA

**Designer:** T. BEDENIS/H. CERON

**CADD:** H. CERON/G. KURDI

**Checked By:** J. KRUSINGA

**Reviewed By:** J. KRUSINGA

**Sheet No.** C-200



PLOT DATE: Feb 12, 2021 - 11:20am - hugo.ceron FILE LOCATION: \\Sme.inc.pa\WIP\085204.00\CADD\WSE\Engineering\085204.00-EXSC.dwg

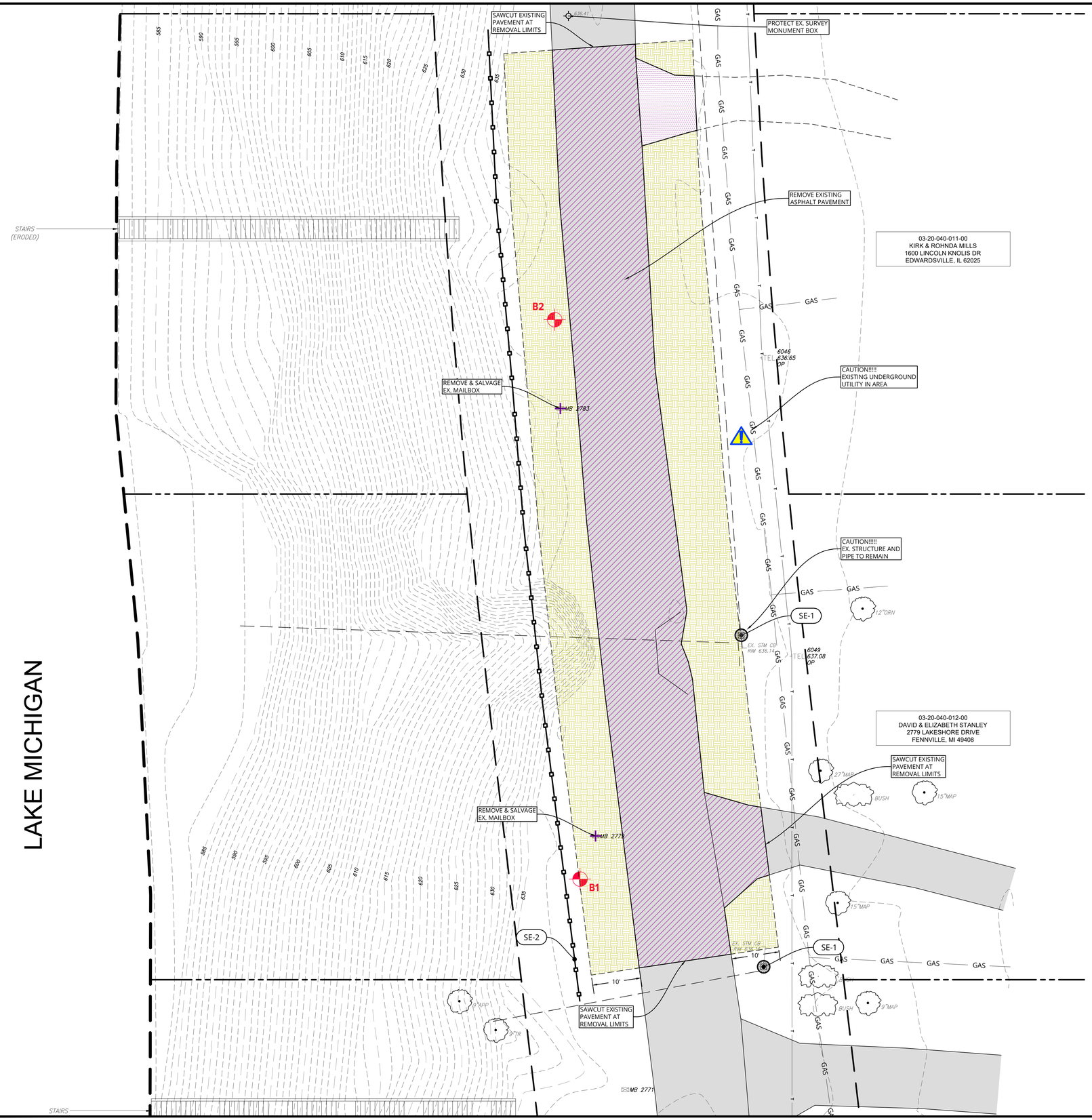


## EXISTING LEGEND

- RIGHT OF WAY
- PROPERTY LINE
- CONTOUR (881)
- INDEX CONTOUR (880)
- STORM SEWER
- TELEPHONE (T)
- GAS (GAS)
- BENCHMARK
- SURVEY MONUMENT BOX
- SQUARE CATCH BASIN
- ROUND CATCH BASIN
- BEEHIVE CATCH BASIN
- STORM MANHOLE
- SIGN
- ELECTRICAL BOX
- ELECTRICAL MANHOLE
- MAILBOX (MB)
- EX. GRADE (×999.99)
- TREE
- BORING
- ASPHALT PAVEMENT

## REMOVAL LEGEND

- SAWCUT, REMOVE AND DISPOSE OF EXISTING ASPHALT PAVEMENT
- EXCAVATE EXISTING GRAVEL AS NEEDED TO ACCOMMODATE THE SHEET PILE WALL SYSTEM
- EXCAVATE EXISTING GREENBELT AS NEEDED TO ACCOMMODATE PROPOSED SHEET PILE WALL SYSTEM
- CAUTION!!!!! EX. UTILITY IN AREA

## SOIL EROSION CONTROL LEGEND

| I.D. | SYMBOL | DESCRIPTION |
|---|---|---|
| SE-1 | | FURNISH AND INSTALL INLET PROTECTION FILTER PER GOVERNING AGENCIES STANDARDS AND SPECIFICATIONS |
| SE-2 | | FURNISH AND INSTALL SILT FENCE PER GOVERNING AGENCIES STANDARDS AND SPECIFICATIONS |

ISSUED FOR BID

SME
www.sme-usa.com

Orientation: N, W, E, S

Scale: 0' 10' 20'
GRAPHIC SCALE: 1" = 10'

ALLEGAN COUNTY ROAD COMMISSION I-35 I-35

**Project**

**LAKESHORE DRIVE BLUFF STABILIZATION**

**SAUGATUCK TOWNSHIP, ALLEGAN COUNTY, MICHIGAN**

**Sheet Name**

**REMOVAL AND SESC PLAN**

**Engineer's Seal**

**Revisions**

| REV | ISSUED FOR | DATE | BY |
|---|---|---|---|
| 01 | OWNER REVIEW | 02-01-2021 | HJC |
| 02 | BIDS | 02-12-2021 | HJC |

**Date**
02-01-21

**SME Project No.**
085204.00

**Project Manager:**
J. KRUSINGA

**Designer:**
T. BEDENIS/H. CERON

**CADD:**
H. CERON/G. KURDI

**Checked By:**
J. KRUSINGA

**Reviewed By:**
J. KRUSINGA

**Sheet No.**
C-300



PLOT DATE: Feb 12, 2021 - 12:17pm - hugo.ceron FILE LOCATION: \\Sme-inc.pt\WP\085204.00\CAD\DWGS\Eng\rev3\085204.00-RemovalandSESC.dwg

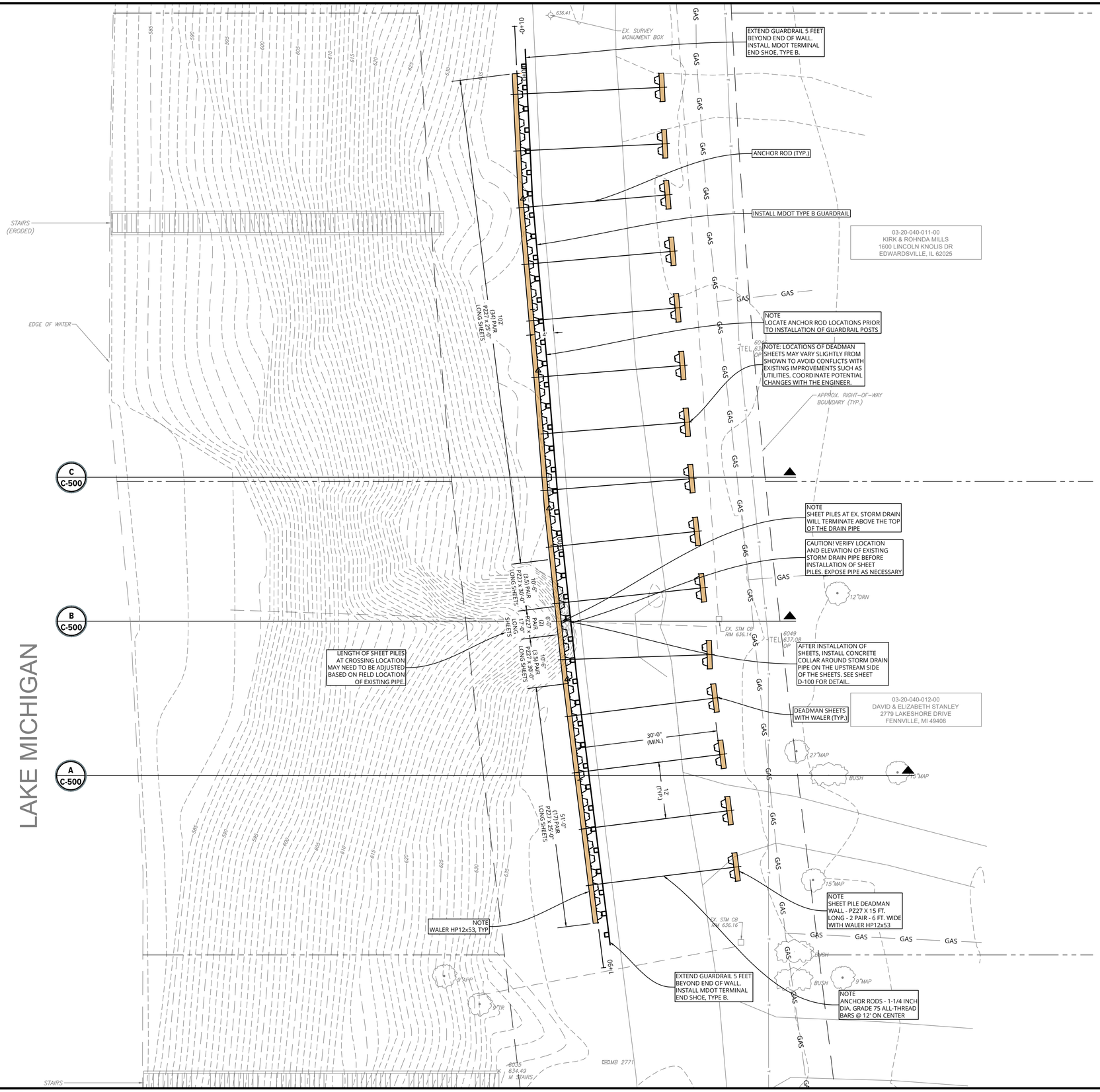


## EXISTING LEGEND

- RIGHT OF WAY
- PROPERTY LINE
- CONTOUR
- INDEX CONTOUR
- STORM SEWER
- TELEPHONE
- GAS
- BENCHMARK
- SURVEY MONUMENT BOX
- SQUARE CATCH BASIN
- ROUND CATCH BASIN
- BEEHIVE CATCH BASIN
- STORM MANHOLE
- SIGN
- ELECTRICAL BOX
- ELECTRICAL MANHOLE
- MAILBOX
- EX. GRADE
- TREE
- BORING
- ASPHALT PAVEMENT

SME
www.sme-usa.com

Orientation

Scale

GRAPHIC SCALE: 1" = 10'

ALLEGAN COUNTY ROAD COMMISSION 1835

**Project**

**LAKESHORE DRIVE BLUFF STABILIZATION**

**SAUGATUCK TOWNSHIP, ALLEGAN COUNTY, MICHIGAN**

**Sheet Name**

**WALL LAYOUT PLAN**

**Engineer's Seal**

**Revisions**

| REV | ISSUED FOR | DATE | BY |
|---|---|---|---|
| 01 | OWNER REVIEW | 02-01-2021 | HJC |
| 02 | BIDS | 02-12-2021 | HJC |

**Date** 02-01-21

**SME Project No.** 085204.00

**Project Manager:** J. KRUSINGA

**Designer:** T. BEDENIS/H. CERON

**CADD:** H. CERON/G. KURDI

**Checked By:** J. KRUSINGA

**Reviewed By:** J. KRUSINGA

**Sheet No.** C-400

ISSUED FOR BID



PLOT DATE: Feb 12, 2021 - 1:03pm - hugo.ceron FILE LOCATION: \\sme-inc\pw\WP\085204.00\CAD\DWG\Eng\rev2\085204.00-SiteLayout.dwg

# PR SHEET PILE WALL CL PROFILE (LOOKING EAST)

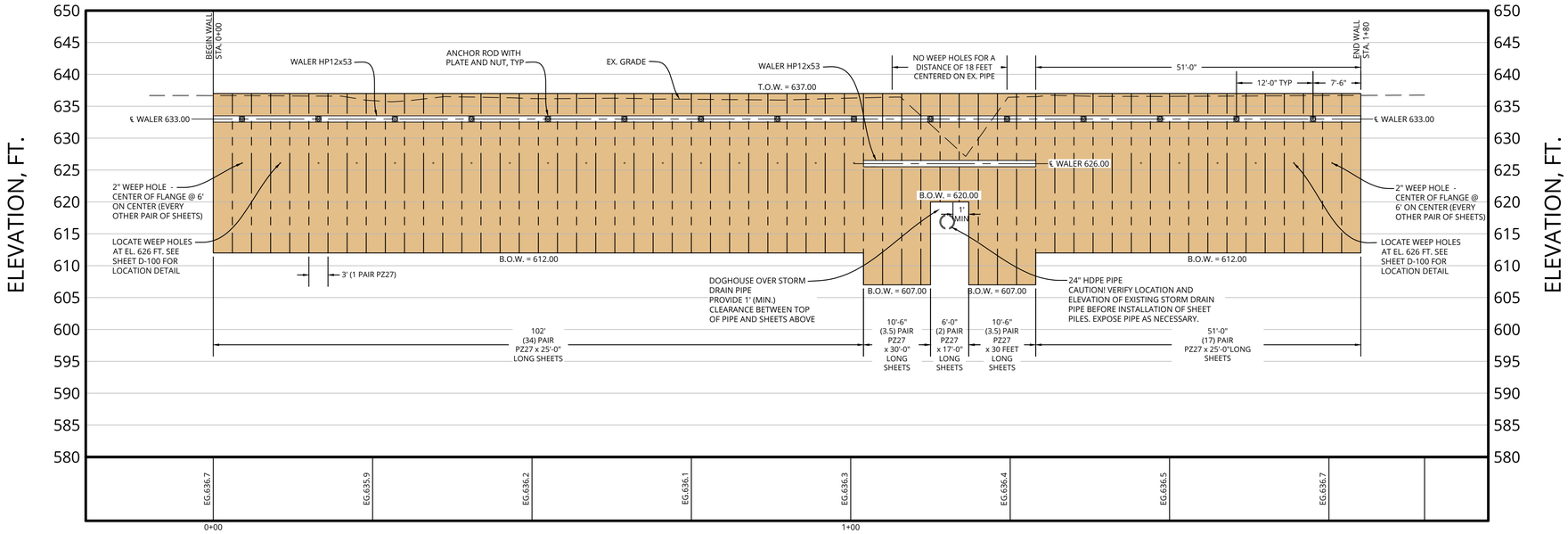


NOTE: CONTRACTOR SHOULD ANTICIPATE HARD DRIVING OF THE SHEET PILES, ESPECIALLY BELOW TIP ELEVATION 623 FEET. CONTRACTOR SHOULD ANTICIPATE USING AN IMPACT HAMMER TO ACHIEVE THE REQUIRED DEPTH OF THE EMBEDMENT FOR THE SHEET PILES. USE AN IMPACT HAMMER WITH A MINIMUM RATED ENERGY OF 15,000 FT.-LBS.

# CROSS SECTION A

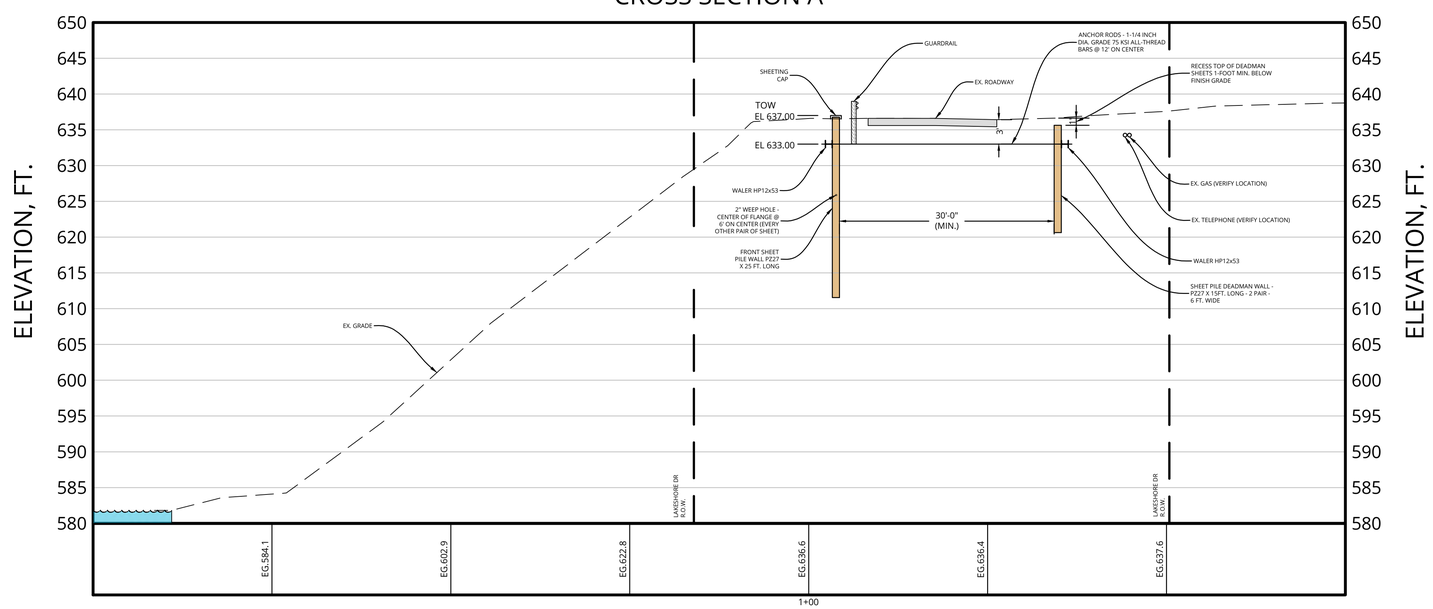


ISSUED FOR BID

SME
www.sme-usa.com

Orientation
N W E S

Scale
0' 10' 20'
GRAPHIC SCALE: 1" = 10'

ALLEGAN COUNTY ROAD COMMISSION I-35 I-35

**Project**

**LAKESHORE DRIVE BLUFF STABILIZATION**

**SAUGATUCK TOWNSHIP, ALLEGAN COUNTY, MICHIGAN**

**Sheet Name**

**PROPOSED PROFILE AND CROSS SECTION A**

**Engineer's Seal**

**Revisions**

| REV | ISSUED FOR | DATE | BY |
|---|---|---|---|
| 01 | OWNER REVIEW | 02-01-2021 | HJC |
| 02 | BIDS | 02-12-2021 | HJC |

**Date**
02-01-21

**SME Project No.**
085204.00

**Project Manager:**
J. KRUSINGA

**Designer:**
T. BEDENIS/H. CERON

**CADD:**
H. CERON/G. KURDI

**Checked By:**
J. KRUSINGA

**Reviewed By:**
J. KRUSINGA

**Sheet No.**
C-500



PLOT DATE: Feb 12, 2021 - 1:50pm - hugo.ceron FILE LOCATION: \\Sme-inc.pri\WIP\085204.00\CADD\WGS\Engineering\085204.00-Profile.dwg

## CROSS SECTION B

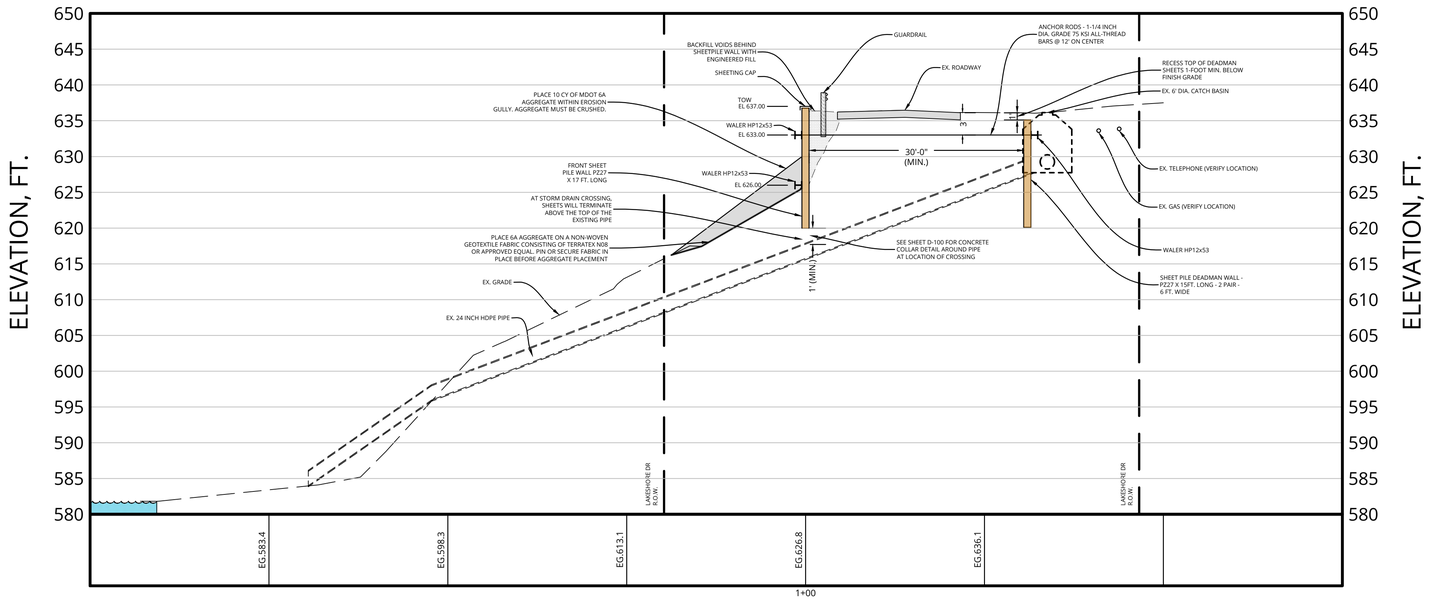


NOTE: CONTRACTOR SHOULD ANTICIPATE HARD DRIVING OF THE SHEET PILES, ESPECIALLY BELOW TIP ELEVATION 623 FEET. CONTRACTOR SHOULD ANTICIPATE USING AN IMPACT HAMMER TO ACHIEVE THE REQUIRED DEPTH OF THE EMBEDMENT FOR THE SHEET PILES. USE AN IMPACT HAMMER WITH A MINIMUM RATED ENERGY OF 15,000 FT.-LBS.

## CROSS SECTION C

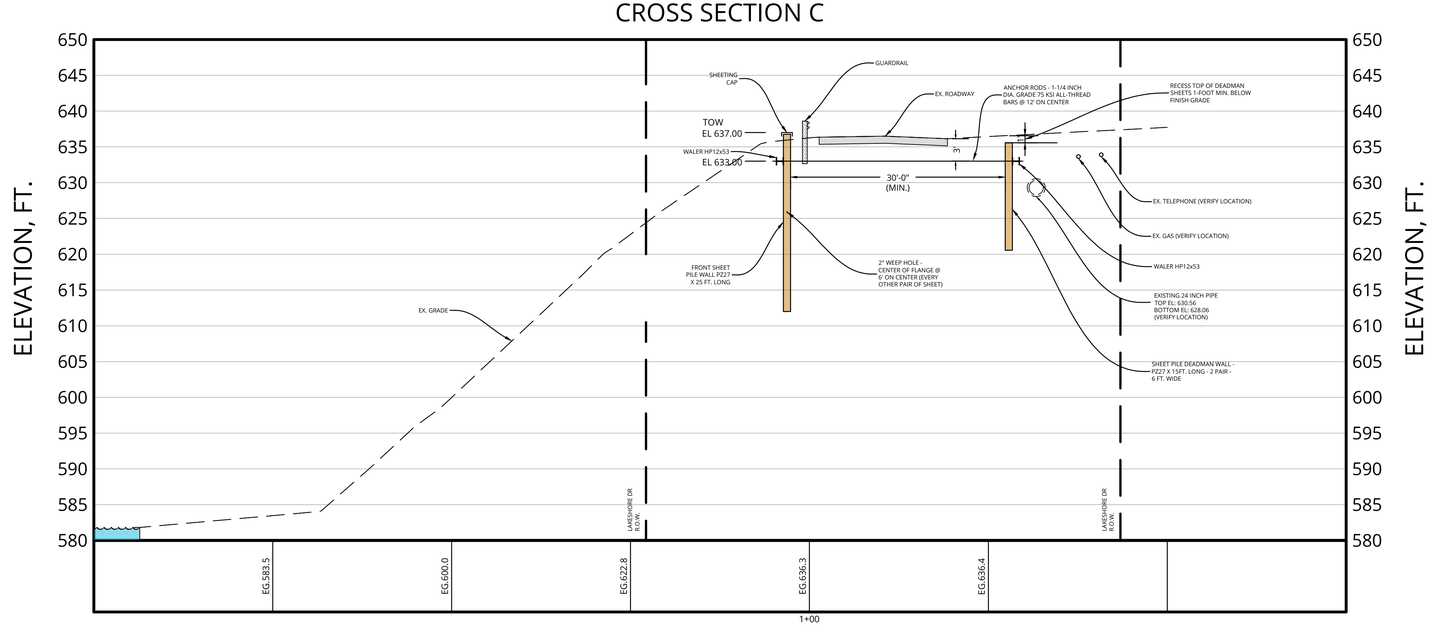


ISSUED FOR BID

SME
www.sme-usa.com

Orientation
Scale
0' ### ###
GRAPHIC SCALE: 1" = ###

ALLEGAN COUNTY ROAD COMMISSION I-835 I-835

**Project**
**LAKESHORE DRIVE BLUFF STABILIZATION**
**SAUGATUCK TOWNSHIP, ALLEGAN COUNTY, MICHIGAN**

**Sheet Name**
**CROSS SECTIONS B AND C**

**Engineer's Seal**

**Revisions**

| REV | ISSUED FOR | DATE | BY |
|---|---|---|---|
| 01 | OWNER REVIEW | 02-01-2021 | HJC |
| 02 | BIDS | 02-12-2021 | HJC |

**Date** 02-01-21
**SME Project No.** 085204.00
**Project Manager:** J. KRUSINGA
**Designer:** T. BEDENIS/H. CERON
**CADD:** H. CERON/G. KURDI
**Checked By:** J. KRUSINGA
**Reviewed By:** J. KRUSINGA
**Sheet No.** C-501



PLOT DATE: Feb 12, 2021 - 3:14pm - hugo.ceron FILE LOCATION: \\Sme-inc.pri\WIP\085204.00\CADD\WGS\Engineering\085204.00-Profile.dwg

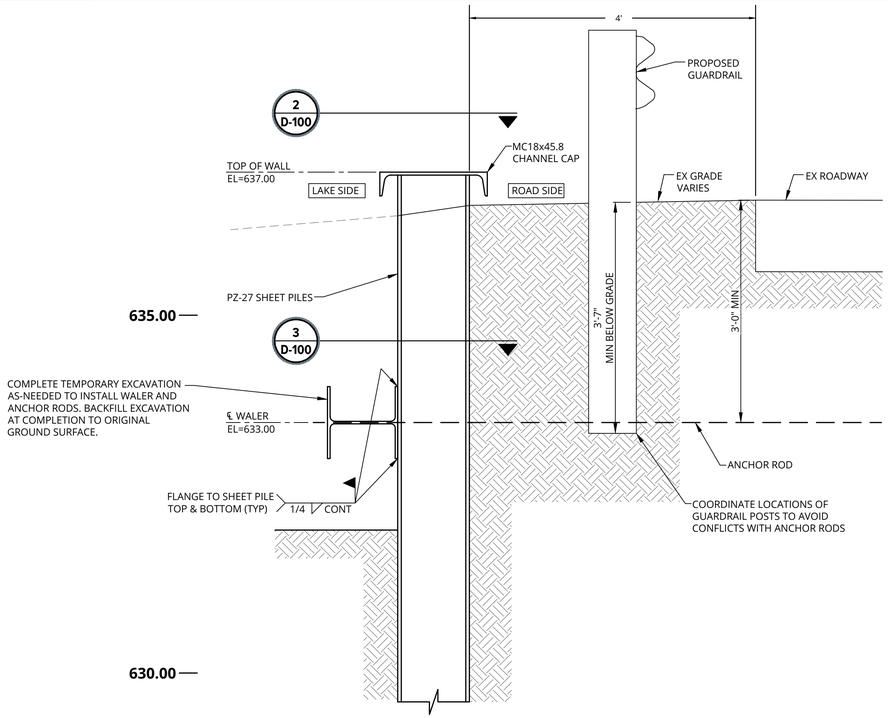


## 1 D-100 SHEET PILE WALL SECTION

SCALE: 1" = 1'-0"

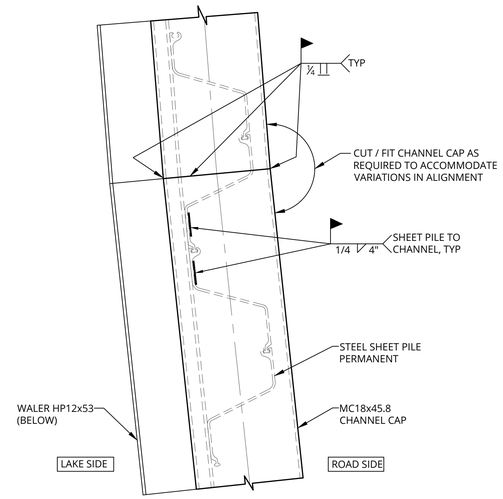


## 2 D-100 SHEET PILE WALL CAP DETAIL

SCALE: 1" = 1'-0"

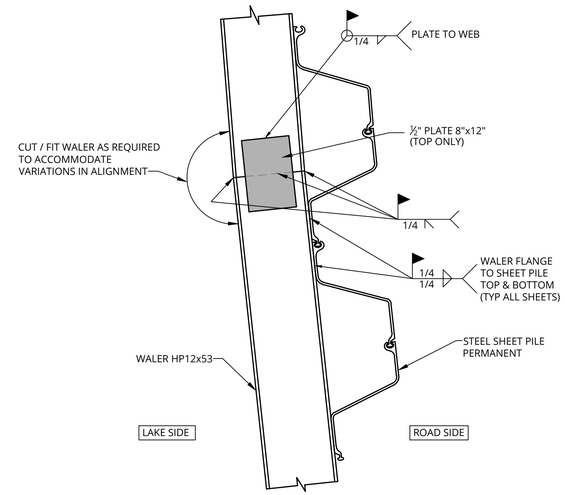


NOTE: CHANNEL CAP NOT SHOWN FOR CLARITY

## 3 D-100 SHEET PILE WALER DETAIL

SCALE: 1" = 1'-0"

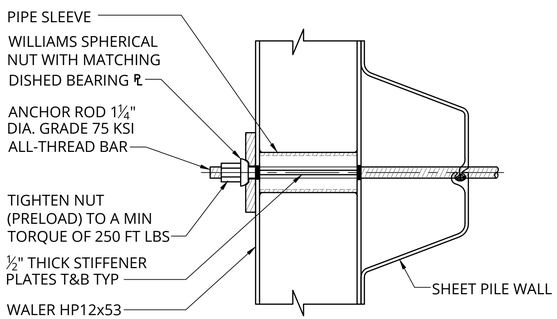


## 4 D-100 ANCHOR ROD TO WALER DETAIL

SCALE: 1½" = 1'-0"

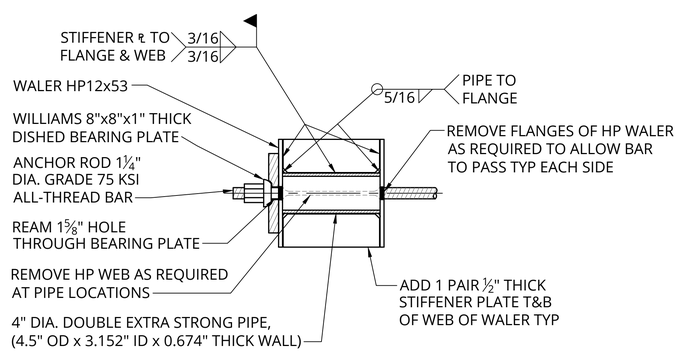


## 5 D-100 ANCHOR ROD TO WALER DETAIL

SCALE: 1½" = 1'-0"

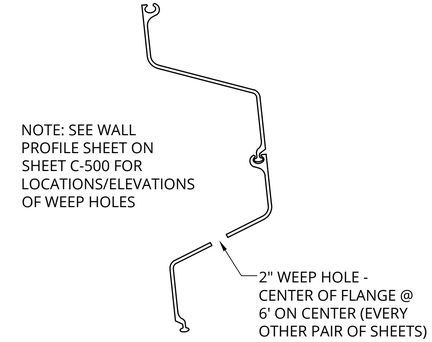


## 6 D-100 WEEP HOLE DETAIL

SCALE: 1" = 1'-0"

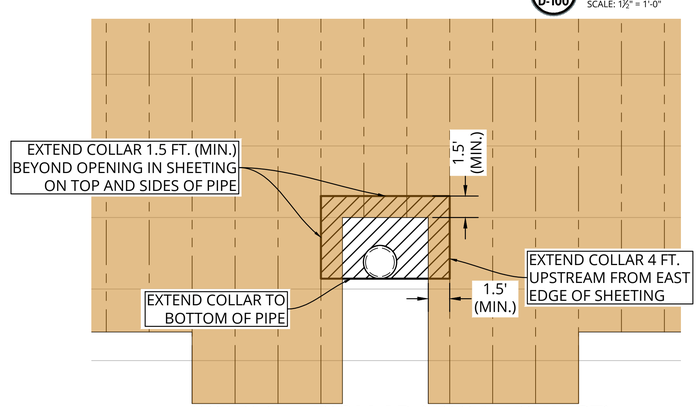


## CONCRETE COLLAR (LOOKING WEST)

SCALE: 1" = 5'-0"

NOTES:

1. EXCAVATE AS NEEDED AFTER INSTALLATION OF SHEET PILES TO INSTALL CONCRETE COLLAR.
2. USE MDOT CONCRETE GRADE S3.

CONSTRUCTION SITE SAFETY IS THE RESPONSIBILITY OF THE CONTRACTOR. NEITHER THE OWNER NOR THE ENGINEER SHALL BE EXPECTED TO ASSUME RESPONSIBILITY FOR SAFETY OF THE WORK, OF PERSONS ENGAGED IN THE WORK, OF NEARBY STRUCTURES, NOR OF OTHER PERSONS.

ISSUED FOR BID

SME
www.sme-usa.com

Orientation | Scale

ALLEGAN COUNTY ROAD COMMISSION 1835 1835

Project
**LAKESHORE DRIVE BLUFF STABILIZATION**

**SAUGATUCK TOWNSHIP, ALLEGAN COUNTY, MICHIGAN**

Sheet Name
**DETAILS**

Engineer's Seal

Revisions

| REV | ISSUED FOR | DATE | BY |
|---|---|---|---|
| 01 | OWNER REVIEW | 02-01-2021 | HJC |
| 02 | BIDS | 02-12-2021 | HJC |

Date: 02-01-21

SME Project No.: 085204.00

Project Manager: J. KRUSINGA

Designer: T. BEDENIS/H. CERON

CADD: H. CERON/G. KURDI

Checked By: J. KRUSINGA

Reviewed By: J. KRUSINGA

Sheet No.: D-100



PLOT DATE: Feb 12, 2021 - 3:05pm - hugo.ceron FILE LOCATION: \\sme-inc\pw\WIP\085204.00\CAD\DWG\Eng\rev3\085204.00-DETAILS.dwg

# BORING LOG TERMINOLOGY

## UNIFIED SOIL CLASSIFICATION AND SYMBOL CHART

| | | | |
|---|---|---|---|
| COARSE-GRAINED SOIL (more than 50% of material is larger than No. 200 sieve size.) | | | |
| GRAVEL More than 50% of coarse fraction larger than No. 4 sieve size | Clean Gravel (Less than 5% fines) | GW | Well-graded gravel; gravel-sand mixtures, little or no fines |
| | | GP | Poorly-graded gravel; gravel-sand mixtures, little or no fines |
| | Gravel with fines (More than 12% fines) | GM | Silty gravel; gravel-sand-silt mixtures |
| | | GC | Clayey gravel; gravel-sand-clay mixtures |
| SAND 50% or more of coarse fraction smaller than No. 4 sieve size | Clean Sand (Less than 5% fines) | SW | Well-graded sand; sand-gravel mixtures, little or no fines |
| | | SP | Poorly graded sand; sand-gravel mixtures, little or no fines |
| | Sand with fines (More than 12% fines) | SM | Silty sand; sand-silt-gravel mixtures |
| | | SC | Clayey sand; sand-clay-gravel mixtures |
| FINE-GRAINED SOIL (50% or more of material is smaller than No. 200 sieve size) | | | |
| SILT AND CLAY Liquid limit less than 50% | | ML | Inorganic silt; sandy silt or gravelly silt with slight plasticity |
| | | CL | Inorganic clay of low plasticity; lean clay, sandy clay, gravelly clay |
| | | OL | Organic silt and organic clay of low plasticity |
| SILT AND CLAY Liquid limit 50% or greater | | MH | Inorganic silt of high plasticity, elastic silt |
| | | CH | Inorganic clay of high plasticity, fat clay |
| | | OH | Organic silt and organic clay of high plasticity |
| HIGHLY ORGANIC SOIL | | PT | Peat and other highly organic soil |

## OTHER MATERIAL SYMBOLS

Topsoil, Void, Sandstone, Asphalt Concrete, Glacial Till, Siltstone, Aggregate Base, Coal, Limestone, Portland Cement Concrete, Shale, Fill

## LABORATORY CLASSIFICATION CRITERIA

| | | |
|---|---|---|
| GW | $C_u = \frac{D_{60}}{D_{10}}$ greater than 4; $C_c = \frac{(D_{30})^2}{D_{10} \times D_{60}}$ between 1 and 3 | |
| GP | Not meeting all gradation requirements for GW | |
| GM | Atterberg limits below "A" line or PI less than 4 | Above "A" line with PI between 4 and 7 are borderline cases requiring use of dual symbols |
| GC | Atterberg limits above "A" line with PI greater than 7 | |
| SW | $C_u = \frac{D_{60}}{D_{10}}$ greater than 6; $C_c = \frac{(D_{30})^2}{D_{10} \times D_{60}}$ between 1 and 3 | |
| SP | Not meeting all gradation requirements for SW | |
| SM | Atterberg limits below "A" line or PI less than 4 | Above "A" line with PI between 4 and 7 are borderline cases requiring use of dual symbols |
| SC | Atterberg limits above "A" line with PI greater than 7 | |

Determine percentages of sand and gravel from grain-size curve. Depending on percentage of fines (fraction smaller than No. 200 sieve size), coarse-grained soils are classified as follows:

Less than 5 percent.....GW, GP, SW, SP
More than 12 percent.....GM, GC, SM, SC
5 to 12 percent.....Cases requiring dual symbols

- SP-SM or SW-SM (SAND with Silt or SAND with Silt and Gravel)
- SP-SC or SW-SC (SAND with Clay or SAND with Clay and Gravel)
- GP-GM or GW-GM (GRAVEL with Silt or GRAVEL with Silt and Sand)
- GP-GC or GW-GC (GRAVEL with Clay or GRAVEL with Clay and Sand)

If the fines are CL-ML:

- SC-SM (SILTY CLAYEY SAND or SILTY CLAYEY SAND with Gravel)
- SM-SC (CLAYEY SILTY SAND or CLAYEY SILTY SAND with Gravel)
- GC-GM (SILTY CLAYEY GRAVEL or SILTY CLAYEY GRAVEL with Sand)

## PARTICLE SIZES

| | | |
|---|---|---|
| Boulders | - | Greater than 12 inches |
| Cobbles | - | 3 inches to 12 inches |
| Gravel- Coarse | - | 3/4 inches to 3 inches |
| Fine | - | No. 4 to 3/4 inches |
| Sand- Coarse | - | No. 10 to No. 4 |
| Medium | - | No. 40 to No. 10 |
| Fine | - | No. 200 to No. 40 |
| Silt and Clay | - | Less than (0.074 mm) |

## PLASTICITY CHART

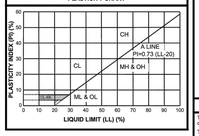


## VISUAL MANUAL PROCEDURE

When laboratory tests are not performed to confirm the classification of soils exhibiting borderline classifications, the two possible classifications would be separated with a slash, as follows:

For soils where it is difficult to distinguish if it is a coarse or fine-grained soil:

- SC/CL (CLAYEY SAND to Sandy LEAN CLAY)
- SM/ML (SILTY SAND to SANDY SILT)
- GC/CL (CLAYEY GRAVEL to Gravelly LEAN CLAY)
- GM/ML (SILTY GRAVEL to Gravelly SILT)

For soils where it is difficult to distinguish if it is sand or gravel, poorly or well-graded sand or gravel; silt or clay; or plastic or non-plastic silt or clay:

- SP/GP or SW/GW (SAND with Gravel to GRAVEL with Sand)
- SC/GC (CLAYEY SAND with Gravel to CLAYEY GRAVEL with Sand)
- SM/GM (SILTY SAND with Gravel to SILTY GRAVEL with Sand)
- SW/SP (SAND or SAND with Gravel)
- GP/GW (GRAVEL or GRAVEL with Sand)
- SC/SM (CLAYEY to SILTY SAND)
- GM/GC (SILTY to CLAYEY GRAVEL)
- CL/ML (SILTY CLAY)
- ML/CL (CLAYEY SILT)
- CH/MH (FAT CLAY to ELASTIC SILT)
- CL/CH (LEAN to FAT CLAY)
- MH/ML (ELASTIC SILT to SILT)

## DRILLING AND SAMPLING ABBREVIATIONS

| | | |
|---|---|---|
| 2ST | – | Shelby Tube – 2" O.D. |
| 3ST | – | Shelby Tube – 3" O.D. |
| AS | – | Auger Sample |
| CS | – | Core Sample |
| LS | – | Liner Sample |
| NR | – | No Recovery |
| PM | – | Pressuremeter |
| RC | – | Rock Core diamond bit. NX size, except where noted |
| SB | – | Split Barrel Sample 1-3/8" I.D., 2" O.D., except where noted |
| VS | – | Vane Shear |
| WS | – | Wash Sample |

## OTHER ABBREVIATIONS

| | | |
|---|---|---|
| WOH | – | Weight of Hammer |
| WOR | – | Weight of Rods |
| SP | – | Soil Probe |
| PID | – | Photo Ionization Device |
| FID | – | Flame Ionization Device |

## DEPOSITIONAL FEATURES

| | | |
|---|---|---|
| Parting | – | as much as 1/16 inch thick |
| Seam | – | 1/16 inch to 1/2 inch thick |
| Layer | – | 1/2 inch to 12 inches thick |
| Stratum | – | greater than 12 inches thick |
| Pocket | – | deposit of small lateral extent |
| Lens | – | lenticular deposit |
| Hardpan/Till | – | an unstratified, consolidated or cemented mixture of clay, silt, sand and/or gravel, the size/shape of the constituents vary widely |
| Lacustrine | – | soil deposited by lake water |
| Mottled | – | soil irregularly marked with spots of different colors that vary in number and size |
| Varved | – | alternating partings or seams of silt and/or clay |
| Occasional | – | one or less per foot of thickness |
| Frequent | – | more than one per foot of thickness |
| Interbedded | – | strata of soil or beds of rock lying between or alternating with other strata of a different nature |

## DESCRIPTION OF RELATIVE QUANTITIES

The visual-manual procedure uses the following terms to describe the relative quantities of notable foreign materials, gravel, sand or fines:

| | | |
|---|---|---|
| Trace | – | particles are present but estimated to be less than 5% |
| Few | – | 5 to 10% |
| Little | – | 15 to 25% |
| Some | – | 30 to 45% |
| Mostly | – | 50 to 100% |

## CLASSIFICATION TERMINOLOGY AND CORRELATIONS

**Cohesionless Soils**

| Relative Density | $N_{60}$ (N-Value) (Blows per foot) |
|---|---|
| Very Loose | 0 to 4 |
| Loose | 5 to 10 |
| Medium Dense | 11 to 30 |
| Dense | 31 to 50 |
| Very Dense | 51 to 80 |
| Extremely Dense | Over 81 |

**Cohesive Soils**

| Consistency | $N_{60}$ (N-Value) (Blows per foot) | Undrained Shear Strength (tsf) |
|---|---|---|
| Very Soft | <2 | 0.25 or less |
| Soft | 2 - 4 | > 0.25 to 0.50 |
| Medium | 5 - 8 | > 0.50 to 1.0 |
| Stiff | 9 - 15 | > 1.0 to 2.0 |
| Very Stiff | 16 - 30 | > 2.0 to 4.0 |
| Hard | > 30 | > 4.0 or greater |

Standard Penetration 'N-Value' = Blows per foot of a 140-pound hammer falling 30 inches on a 2-inch O.D. split barrel sampler, except where noted. N60 values as reported on boring logs represent raw N-values corrected for hammer efficiency only.

Revised 10/06/20

# BORING LOG NOTES

1. SEE SHEET NO. C-200 FOR THE LOCATIONS OF THE BORINGS ASSOCIATED WITH THE LOGS PROVIDED ON THIS SHEET.
2. REFER TO THE BORING LOG TERMINOLOGY DOCUMENT ON THIS SHEET FOR AN EXPLANATION OF SYMBOLS AND TERMS USED ON THE BORING LOGS.
3. THE STRATIFICATION DEPTHS SHOWN ON THE BORING LOGS ARE INTENDED TO INDICATE A ZONE OF TRANSITION FROM ONE SOIL TYPE TO ANOTHER. THEY ARE NOT INTENDED TO SHOW EXACT DEPTHS OF CHANGE FROM ONE SOIL TYPE TO ANOTHER.
4. SOIL CONDITIONS MAY VARY BETWEEN OR AWAY FROM THE BORING LOCATIONS FROM THOSE CONDITIONS NOTED ON THE LOGS. GROUNDWATER CONDITIONS COMMONLY VARY OVER TIME AND THE SITE GROUNDWATER CONDITIONS DURING CONSTRUCTION MAY VARY FROM THE CONDITIONS SHOWN ON THE LOGS.



12/28/20 5:00:10 PM

## BORING B1

PAGE 1 OF 2
BORING DEPTH: 70 FEET

**PROJECT NAME:** Lakeshore Drive Bluff Stabilization **PROJECT NUMBER:** 085204.00
**CLIENT:** Allegan County Road Commission **PROJECT LOCATION:** Saugatuck Township, Allegan County, Michigan
**DATE STARTED:** 10/20/20 **COMPLETED:** 10/20/20 **BORING METHOD:** Hollow-stem Augers
**DRILLER:** RM **RIG NO.:** 531 (CME55LCX) - ATV **LOGGED BY:** JEM **CHECKED BY:** JMK

ELEVATION: 636.8 FT

| Depth (ft) | Profile description | Sample type/no. | Recovery (inches) | SPT blows per six inches | Remarks |
|---|---|---|---|---|---|
| 0.3 | 4-inches of TOPSOIL | | | | |
| 2.0 | FILL- Fine SAND- Brown- Moist- Loose (SP) | SB1 | 18 | 2 2 6 | |
| 2.5 | BURIED TOPSOIL- Fine SILTY SAND- Occasional Roots- Dark Brown- Moist- Medium Dense (SM) | | | | |
| | | SB2 | 18 | 5 6 7 | |
| 9.5 | Fine SAND- Light Brown- Moist- Medium Dense (SP) | SB3 | 18 | 4 5 5 | |
| | | SB4 | 10 | 10 14 18 | |
| 12.0 | Fine to Coarse SAND with Silt and Gravel- Brown- Moist- Dense to Medium Dense (SP-SM) | SB5 | 18 | 9 10 13 | Cobbles reported from 10 to 12 feet. |
| 16.0 | Fine SILTY SAND- Grayish Brown- Wet- Dense to Medium Dense (SM) | SB6 | 18 | 7 9 9 | |
| 18.5 | Sandy LEAN CLAY- Gray- Hard (CL) | SB7 | 18 | 13 15 17 | |
| | | SB8 | 18 | 15 18 24 | |
| | LEAN CLAY- Brown- Hard to Very Stiff (CL) | SB9 | 18 | 12 16 19 | |
| | | SB10 | 18 | 10 12 13 | |
| | | SB11 | 18 | 11 13 13 | |
| | | SB12 | 6 | 9 10 14 | |

Hammer efficiency: 83% DATE: 3/10/2020 $N_{60}$ – ○; Dry density (pcf) – ■; Moisture & Atterberg limits (%) PL MC LL; ▼ Hand pene. ■ Torvane shear ● Unc. comp. ⊠ Vane shear (PK) × Vane shear (rem) ◆ Triaxial (UU) shear strength (ksf)

**GROUNDWATER & BACKFILL INFORMATION**

| | Depth (ft) | Elev (ft) |
|---|---|---|
| ▽ DURING BORING: | 12.0 | 624.8 |
| ▼ AT END OF BORING: | 54.0 | 582.8 |

BACKFILL METHOD: Auger Cuttings

NOTES: 1. The indicated stratification lines are approximate. The in-situ transitions between materials may be gradual.
2. The colors depicted on the symbolic profile are solely for visualization purposes and do not necessarily represent the in-situ colors encountered.
3. Water added to the annulus of the augers below a depth of 55 feet to prevent blow-in at the tip of the augers.

(CONTINUED BELOW)

12/28/20 5:00:12 PM

## BORING B2

PAGE 1 OF 2
BORING DEPTH: 69.5 FEET

**PROJECT NAME:** Lakeshore Drive Bluff Stabilization **PROJECT NUMBER:** 085204.00
**CLIENT:** Allegan County Road Commission **PROJECT LOCATION:** Saugatuck Township, Allegan County, Michigan
**DATE STARTED:** 10/19/20 **COMPLETED:** 10/19/20 **BORING METHOD:** Hollow-stem Augers
**DRILLER:** RM **RIG NO.:** 531 (CME55LCX) - ATV **LOGGED BY:** JEM **CHECKED BY:** JMK

ELEVATION: 636.2 FT

| Depth (ft) | Profile description | Sample type/no. | Recovery (inches) | SPT blows per six inches | Remarks |
|---|---|---|---|---|---|
| | TOPSOIL FILL- Fine SILTY SAND- Dark Brown- Moist- Medium Dense (SM) | SB1 | 18 | 5 5 6 | |
| 2.5 | | | | | |
| | Fine SAND- Light Brown and Brown- Moist- Medium Dense (SP) | SB2 | 18 | 5 7 8 | |
| | | SB3 | 18 | 4 5 5 | |
| 9.5 | | SB4 | 10 | 12 17 28 | |
| 12.0 | Fine to Coarse SILTY SAND with Gravel- Brown- Moist to Wet- Very Dense to Medium Dense (SM) | SB5 | 18 | 7 10 10 | Cobbles reported from 9.5 to 12 feet. |
| | | SB6 | 18 | 10 13 13 | |
| | Sandy LEAN CLAY- Gray- Hard to Very Stiff (CL) | SB7 | 18 | 10 10 16 | |
| | | SB8 | 18 | 11 13 15 | |
| | | SB9 | 18 | 11 13 22 | |
| | | SB10 | 18 | 9 12 19 | |
| 28.5 | | SB11 | 6 | 8 15 17 | |
| | LEAN CLAY- Brown- Hard (CL) | SB12 | 18 | 12 13 16 | |

Hammer efficiency: 83% DATE: 3/10/2020 $N_{60}$ – ○; Dry density (pcf) – ■; Moisture & Atterberg limits (%) PL MC LL; ▼ Hand pene. ■ Torvane shear ● Unc. comp. ⊠ Vane shear (PK) × Vane shear (rem) ◆ Triaxial (UU) shear strength (ksf)

**GROUNDWATER & BACKFILL INFORMATION**

| | Depth (ft) | Elev (ft) |
|---|---|---|
| ▽ DURING BORING: | 11.0 | 625.2 |
| ▼ AT END OF BORING: | 53.0 | 583.2 |

BACKFILL METHOD: Auger Cuttings

NOTES: 1. The indicated stratification lines are approximate. The in-situ transitions between materials may be gradual.
2. The colors depicted on the symbolic profile are solely for visualization purposes and do not necessarily represent the in-situ colors encountered.
3. Water added to the annulus of the augers below a depth of 55 feet to prevent blow-in at the tip of the augers.

(CONTINUED BELOW)

12/28/20 5:00:19 PM

## BORING B1

PAGE 2 OF 2
BORING DEPTH: 70 FEET

**PROJECT NAME:** Lakeshore Drive Bluff Stabilization **PROJECT NUMBER:** 085204.00
**CLIENT:** Allegan County Road Commission **PROJECT LOCATION:** Saugatuck Township, Allegan County, Michigan

| Depth (ft) | Profile description | Sample type/no. | Recovery (inches) | SPT blows per six inches | Remarks |
|---|---|---|---|---|---|
| | LEAN CLAY- Brown- Hard to Very Stiff (CL) *(continued)* | SB13 | 18 | 12 15 18 | |
| | | SB14 | 18 | 10 12 13 | |
| 44.0 | | SB15 | 18 | 18 22 41 | |
| | Fine to Medium SAND- Light Brown- Moist to Wet- Extremely Dense to Dense (SP) | SB16 | 18 | 17 17 28 | |
| | | SB17 | 18 | 12 16 19 | |
| 59.0 | | SB18 | 18 | 12 19 25 | |
| | Fine to Coarse SAND with Gravel- Gray- Wet- Very Dense (SP) | SB19 | 18 | 19 32 23 | |
| 70.0 | | SB20 | 18 | 18 21 25 | |

END OF BORING AT 70.0 FEET.

12/28/20 5:00:12 PM

## BORING B2

PAGE 2 OF 2
BORING DEPTH: 69.5 FEET

**PROJECT NAME:** Lakeshore Drive Bluff Stabilization **PROJECT NUMBER:** 085204.00
**CLIENT:** Allegan County Road Commission **PROJECT LOCATION:** Saugatuck Township, Allegan County, Michigan

| Depth (ft) | Profile description | Sample type/no. | Recovery (inches) | SPT blows per six inches | Remarks |
|---|---|---|---|---|---|
| | LEAN CLAY- Brown- Hard (CL) *(continued)* | SB13 | 18 | 13 15 19 | |
| 39.0 | | SB14 | 10 | 19 50 | |
| | Fine to Medium SAND- Light Brown and Brown- Moist- Very Dense (SP) | SB15 | 18 | 15 25 32 | |
| | | SB16 | 18 | 21 25 30 | |
| 53.0 | | SB17 | 18 | 26 30 30 | |
| | Fine to Coarse SAND with Gravel- Brown to Grayish Brown below 60 feet- Wet- Extremely Dense to Very Dense (SP-SM) | SB18 | 18 | 13 21 24 | |
| | | SB19 | 18 | 12 21 24 | |
| 69.5 | | SB20 | 0 | 27 51 | |

END OF BORING AT 69.5 FEET.

ISSUED FOR BID

SME
www.sme-usa.com

Orientation | Scale

Allegan County Road Commission 1835 1835

Project
**LAKESHORE DRIVE BLUFF STABILIZATION**
**SAUGATUCK TOWNSHIP, ALLEGAN COUNTY, MICHIGAN**

Sheet Name
**BORING LOGS**

Engineer's Seal

Revisions

| REV | ISSUED FOR | DATE | BY |
|---|---|---|---|
| 01 | OWNER REVIEW | 02-01-2021 | HJC |
| 02 | BIDS | 02-12-2021 | HJC |

Date: 02-01-21
SME Project No.: 085204.00
Project Manager: J. KRUSINGA
Designer: T. BEDENIS/H. CERON
CADD: H. CERON/G. KURDI
Checked By: J. KRUSINGA
Reviewed By: J. KRUSINGA
Sheet No.: D-101



PLOT DATE: Feb 12, 2021 - 1:26am - hugo.ceron FILE LOCATION: \\Sme-inc\pw\WP\085204.00\CAD\DWGS\Engrwg\085204.00-DETAILS.dwg